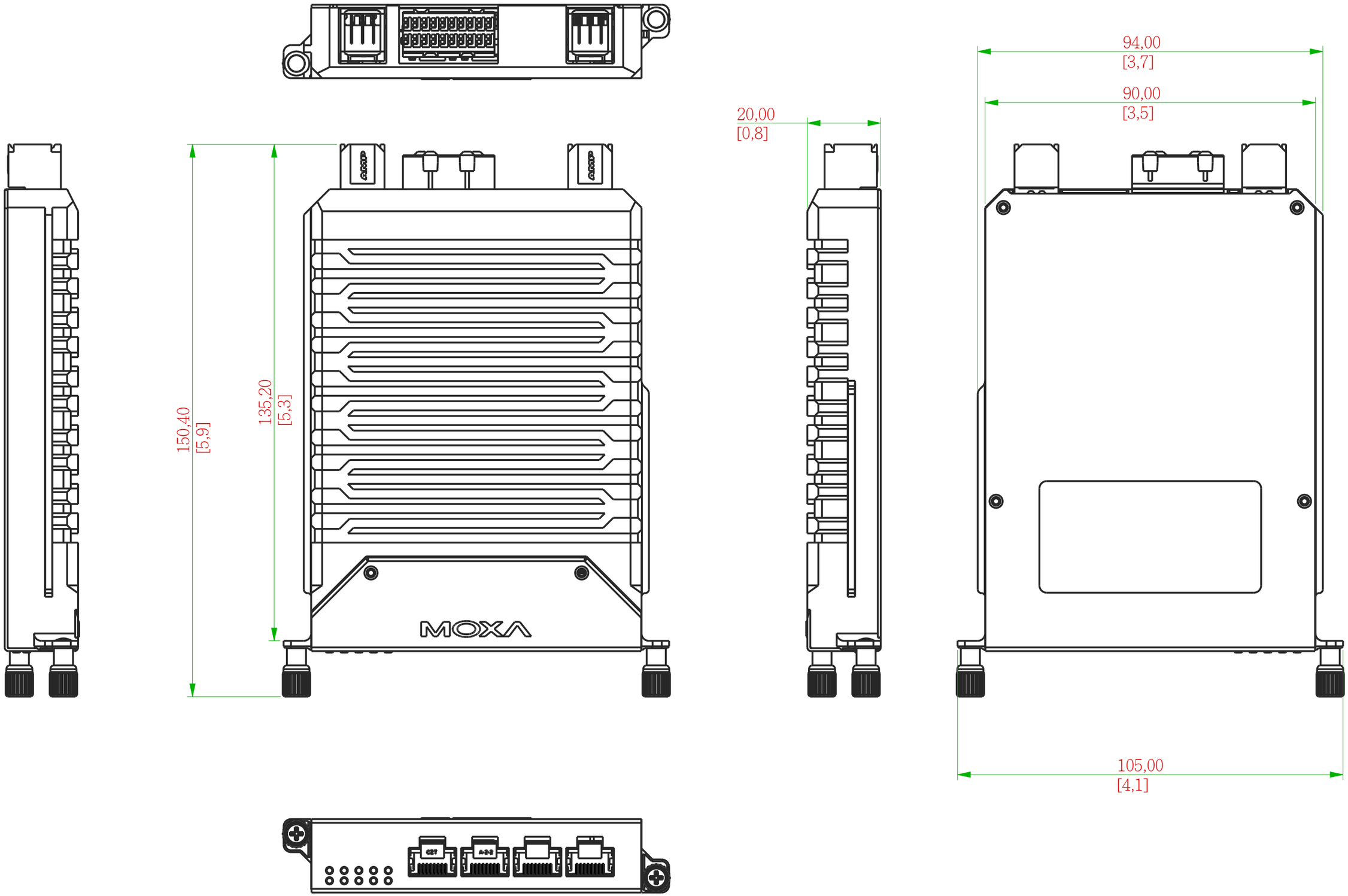
150,40
[5,9]
135,20
[5,3]
MOXA
20,00
[0,8]
94,00
[3,7]
90,00
[3,5]
105,00
[4,1]