Rev. Mark	Description	Date

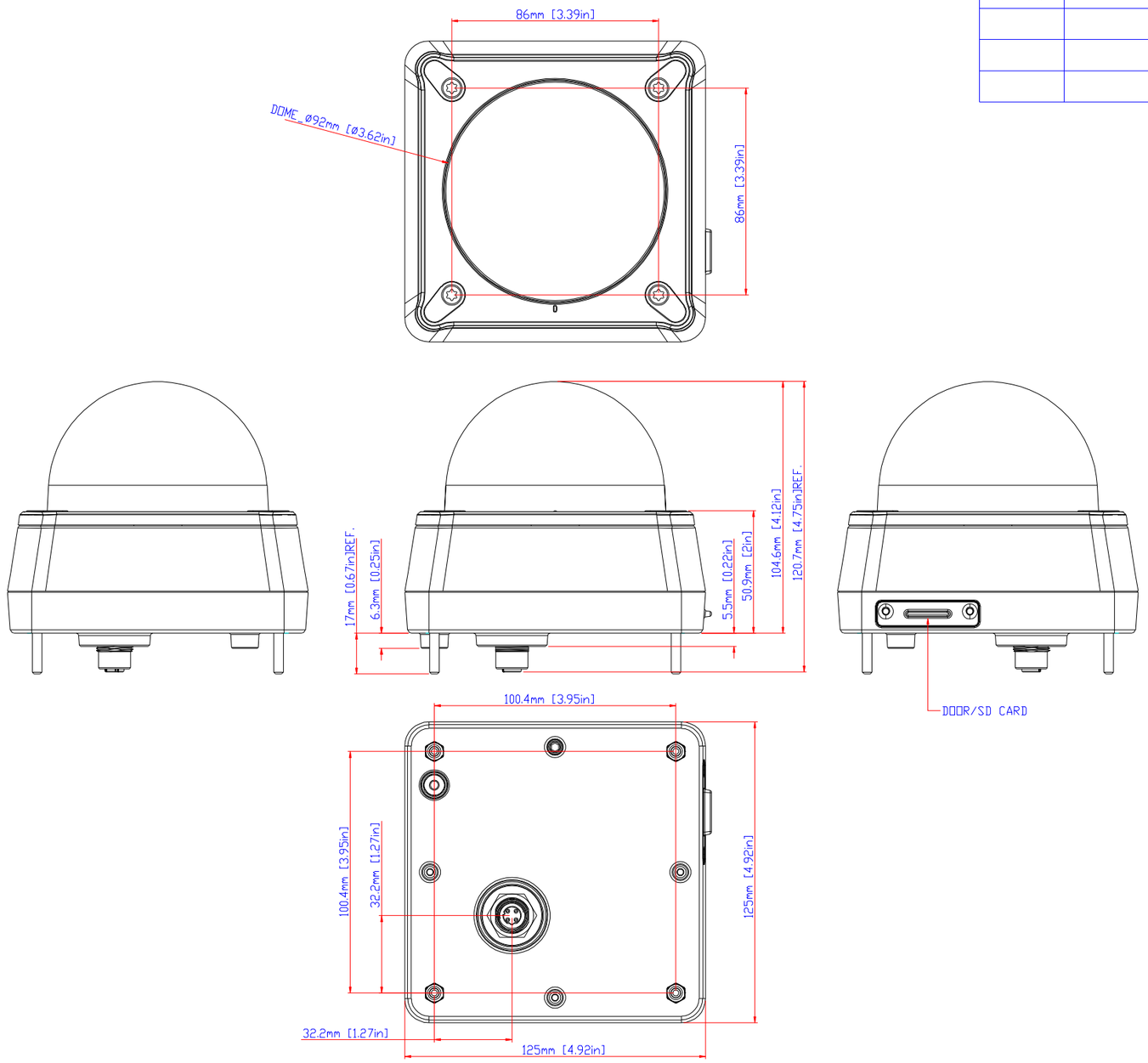

Specified Tolerance			
Length	Class 1	Class 2	Class 3
0.5~<6	±0.05	±0.1	±0.15
6~<30	±0.1	±0.2	±0.25
30~<120	±0.2	±0.3	±0.35
120~<180	±0.3	±0.4	±0.45
180~<315	±0.4	±0.5	±0.55
315~<500	±0.5	±0.6	±0.65
500~	±0.6	±0.7	±0.75

MOXA®
Tel:+886-2-89191230
Fax:+886-2-89191231
www.moxa.com

Designer	Projection	Unit	mm	Tolerance	Class 2	Product Model	VPort 16-Dome-M12	Frame	A4
xxxxx	3rd Angle	Scale	1:1	Material	XXXXX	Drawn Name	Dimensions_VPort 16-Dome-M12_TOP		
		Date	XXXXX	File Name	XXXXX	Product No.	XXXXX	Ver.	1.0